Filter/ Water Separator

FW10-V Series

Qualified to specification EI 1581 6th Edition, Category C, Type S

The filter/water separator FW10-V is designed to be compliant with procedural guidelines, applicable legal regulations and requirements of the pressure vessel regulation AD2000. Additional pressure vessel standards can be met with these assemblies as well. The filter vessels incorporate flat sealed or threaded base coalescer elements and reusable separator elements.

Application Area

- Vertical filter vessels for fixed installation

Technical Data

• Design and construction:	EI 1596 3rd Edition
• Design pressure:	Designed to pressure requirements
• Flow rate:	Up to 9500 lpm (2509 USgpm)

Standard Design

• Material:	Carbon steel (other version on request)
• Interior:	Epoxy coating according to EI 1541
• Exterior:	Prime coated
• Cover seal:	NBR (Buna-N)

Recommended Accessories

- Differential pressure gauge
- Manual drain valve
- Automatic air eliminator
- Pressure relief valve
- Sump heater
- Electronic sensors

FAUDI Aviation GmbH
Scharnhorststraße 7B
35260 Stadtallendorf
Germany

Phone: +49 6428 44652-570
Fax: +49 6428 44652-223
Email: contact@sefiso.com

www.faudi-aviation.com

Order Reference

Vessels	Coalescer Elements		Separator Elements		Flow Rates	
Model No.	Model	Quantity	Model	Quantity	lpm	USgpm
FW10-V-3-559	P.4-559	3	60.677-565	1	640	169
FW10-V-3-727	P.4-727	3	60.677-727	1	840	221
FW10-V-3-842	P.4-842	3	60.677-727	1	960	253
FW10-V-5-727	P.4-727	5	60.677-727	2	1400	369
FW10-V-5-842	P.4-842	5	60.677-727	2	1680	443
FW10-V-9-727	P.4-727	9	60.677-727	3	2500	660
FW10-V-9-965	P.4-965	9	60.677-842	3	2939	776
FW10-V-9-1093	P.4-1093	9	60.677-1093	3	4000	1056
FW10-V-11(12)-965	P.4-965	11(12)	60.677-900	5	4335	1145
FW10-V-9-1422	P.4-1422	9	60.677-1093	3	4500	1188
FW10-V-12-1093	P.4-1093	12	60.677-900	5	5500	1452
FW10-V-11(12)-1422	P.4-1422	11(12)	60.677-1188	5	6500	1717
FW10-V-12-1422	P.4-1422	12	60.677-1188	6	7100	1875
FW10-V-14-1422	P.4-1422	14	60.677-1188	6	8150	2153
FW10-V-15-1422	P.4-1422	15	60.677-1188	6	8750	2311
FW10-V-16-1422	P.4-1422	16	60.677-1188	6	9500	2509

Dimensions

- For exact dimensions please ask for a vessel drawing

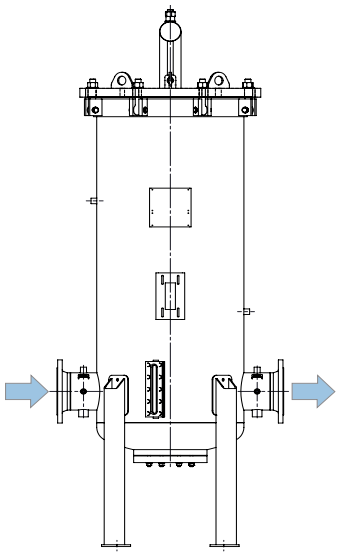

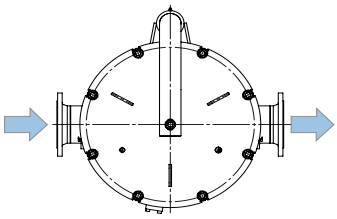

FAUDI Aviation GmbH
Scharnhorststraße 7B
35260 Stadtallendorf
Germany

Phone: +49 6428 44652-570
Fax: +49 6428 44652-223
Email: contact@sefiso.com

www.faudi-aviation.com